Installation Instructions
Model: NPQ Series/Framed Corner Entry/Shower Enclosure
NPQ3636516G-L (Glass - Left)
NPQ3636516G-R (Glass - Right)

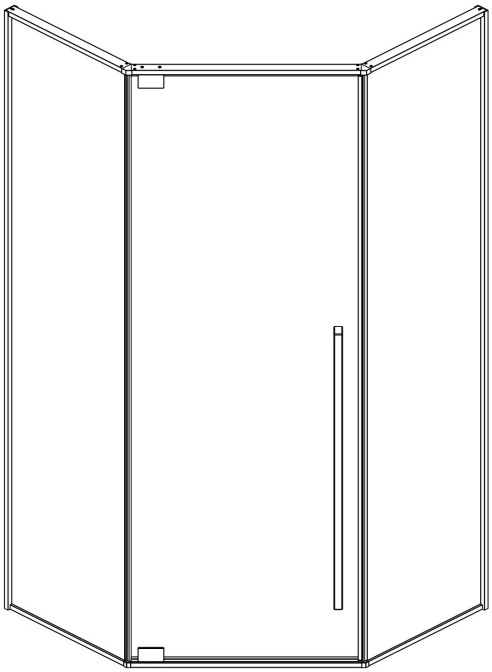

NPQ3636516G-L:
Glass: 5/16” easy to clean
Size: 36” x 36” x 79”

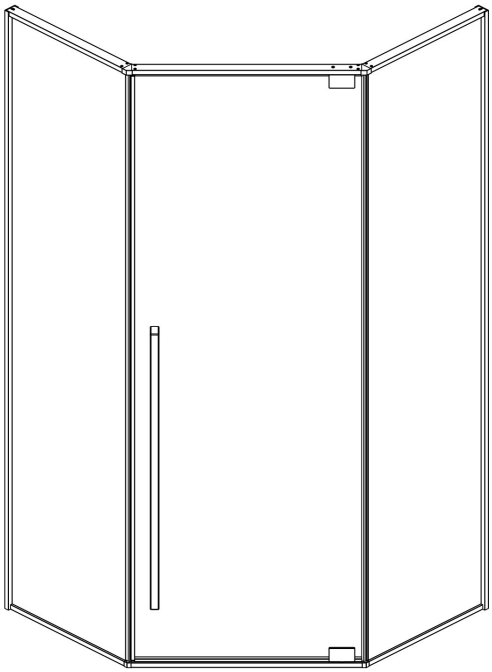

NPQ3636516G-R:
Glass: 5/16” easy to clean
Size: 36” x 36” x 79”

TABLE OF CONTENTS

Preparation	2
Materials & Tools	2
Parts	3-5
Installation	6-13
Care and Cleaning	14
Warranty	14
Return Policy	14
Asking for Assistance	14

Please read all instructions carefully before starting the installation.

PREPARATION

- **Before You Begin**
  Before installing any Dawn product in your home, make sure you are in compliance with all local plumbing codes.
- **Check The Accessory Items**
  Before installation, please check the condition of the product and, if appropriate, its components. If there is any problem with the product and/or its components, please contact the store you purchased it from for a replacement. As soon as you have inspected your product, please return it to its original packaging until you are ready to install it.
- **Handle With Care**
  To protect its finish and avoid damage before and after installation, please handle the product with care. For care and cleaning tips after installation, please refer to the *Care and Cleaning Guide* in this instruction guide. Special care should be taken when drilling walls to avoid hidden pipes or electrical cables. Note: This product is heavy and may require two people to install.

MATERIALS & TOOLS

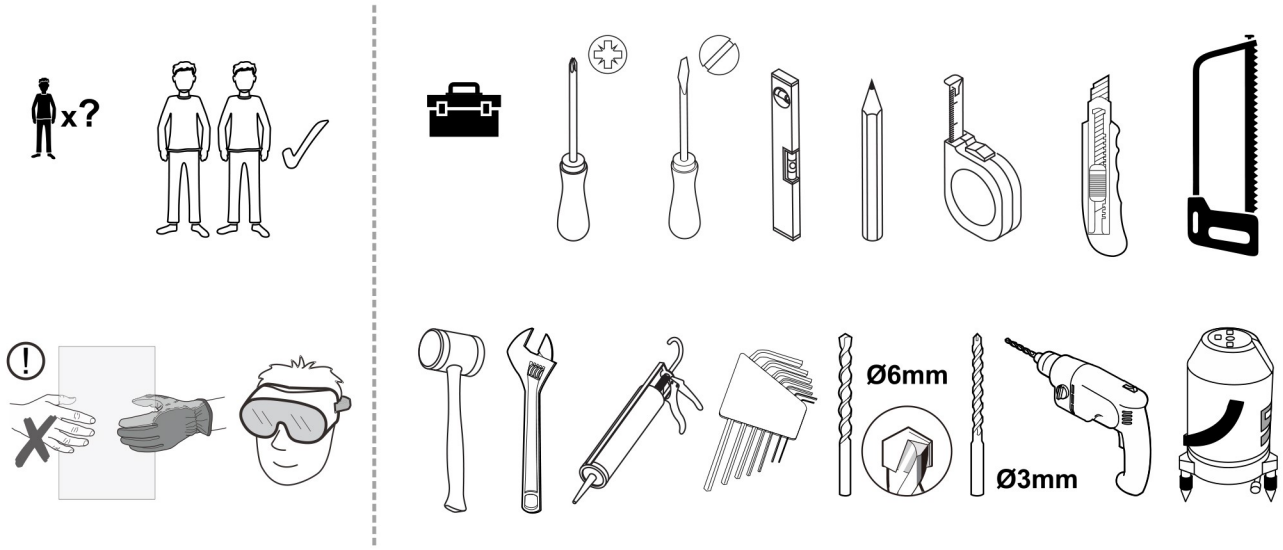

*Drawings are for reference only. Please refer to actual product for exact size, shape and parts.
*Dawn reserves the right to make revisions in the design of products without notice for improvement of its performance and quality.

PARTS

1

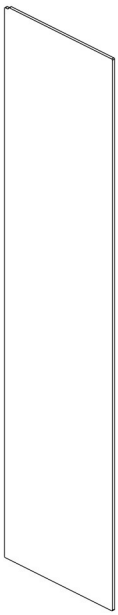

[01] x1

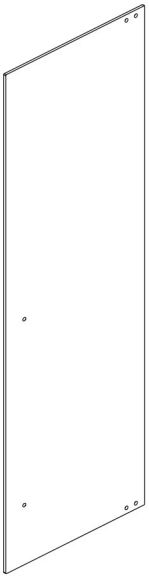

[02] x1

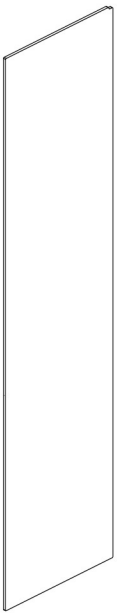

[03] x1

PARTS

2

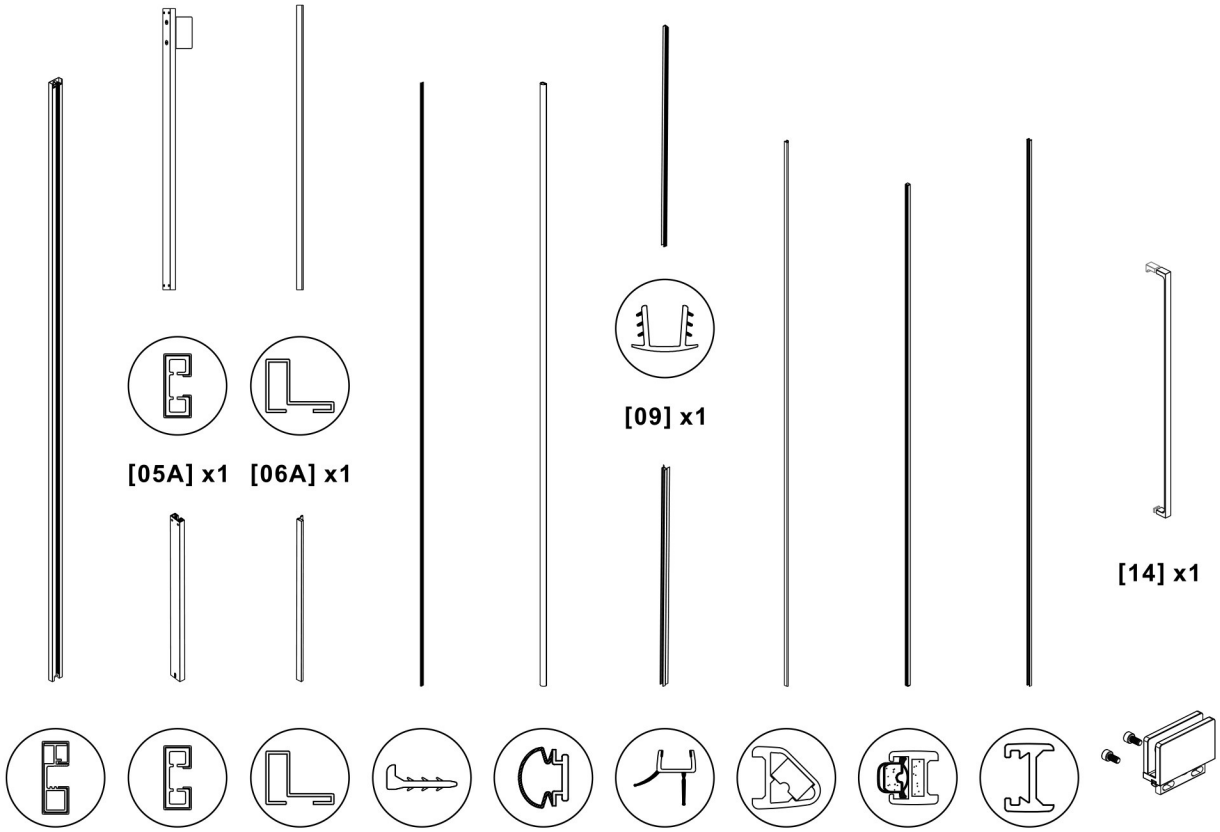
[05A] x1
[06A] x1
[09] x1
[14] x1
[04] x2
[05B] x2
[06B] x2
[07] x2
[08] x1
[10] x1
[11] x1
[12] x1
[13] x1
[15] x1

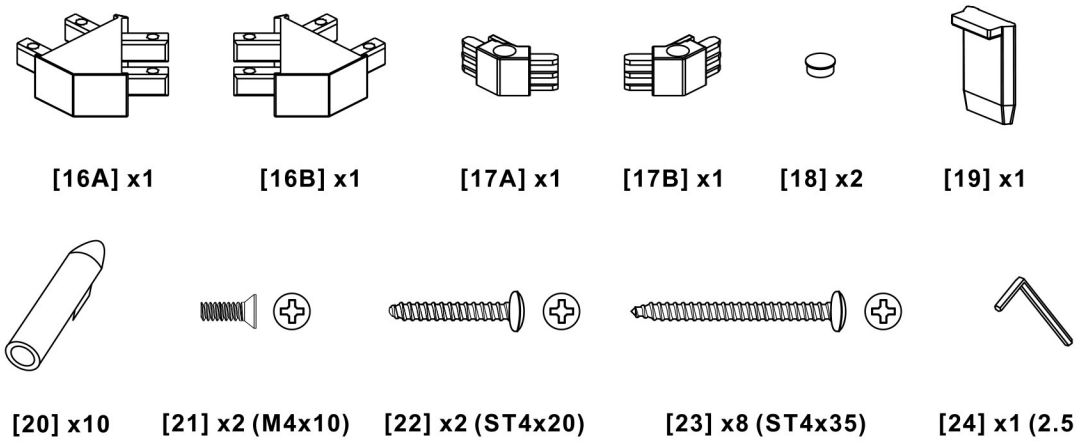
[16A] x1
[16B] x1
[17A] x1
[17B] x1
[18] x2
[19] x1
[20] x10
[21] x2 (M4x10)
[22] x2 (ST4x20)
[23] x8 (ST4x35)
[24] x1 (2.5mm)

PARTS

1 + 2

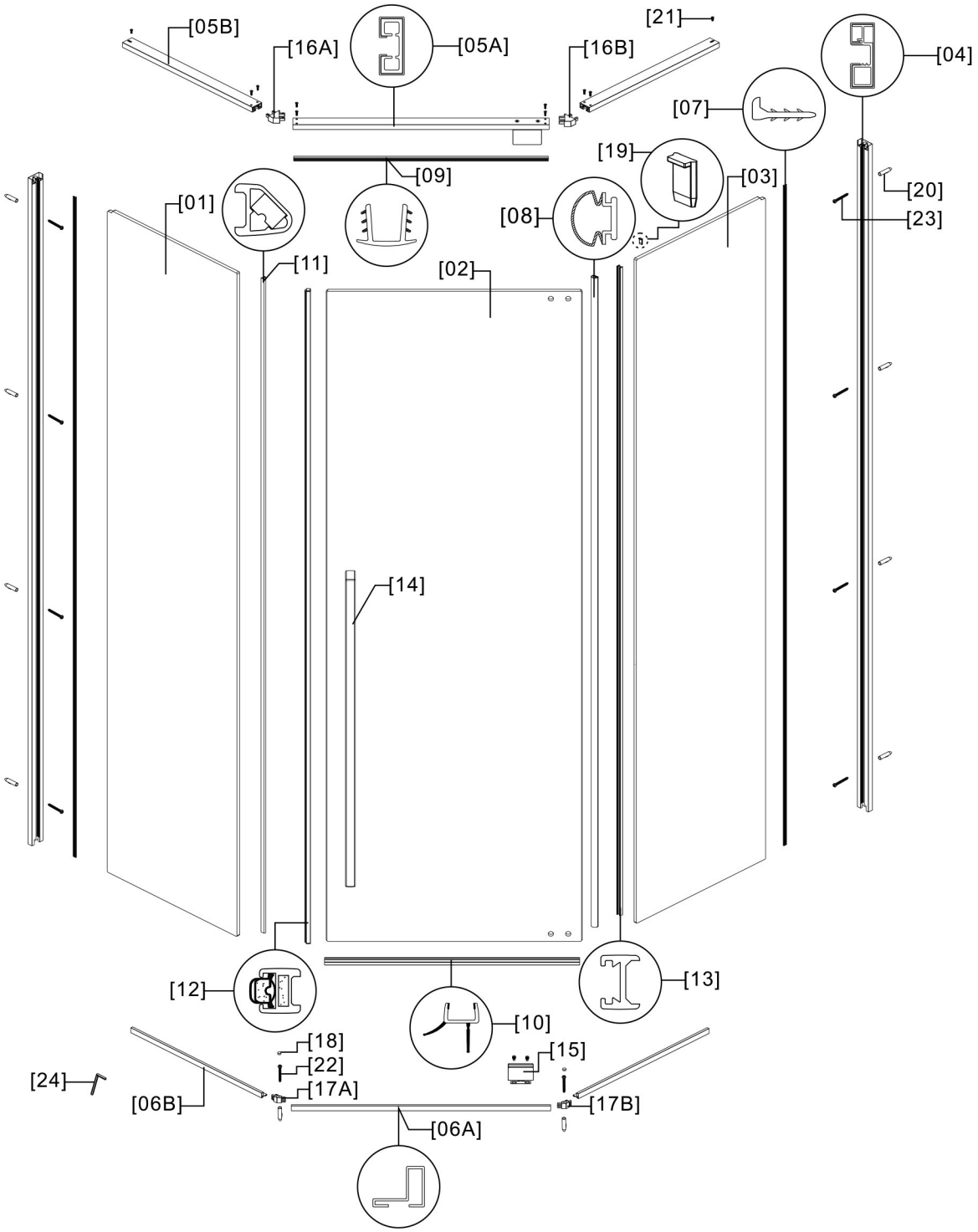
[05B]
[16A]
[05A]
[16B]
[21]
[04]
[07]
[19]
[09]
[03]
[20]
[01]
[08]
[23]
[11]
[02]
[14]
[12]
[13]
[10]
[18]
[22]
[15]
[24]
[06B]
[17A]
[17B]
[06A]

INSTALLATION

IMPORTANT: Recommended for professional installers only. The installer maintains responsibility for installing the product safely.

01

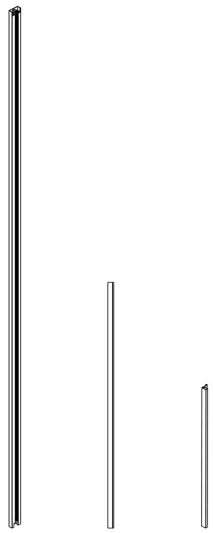

[04] x2 [06A] x1 [06B] x2

[17A] x1 [17B] x1

[20] x10

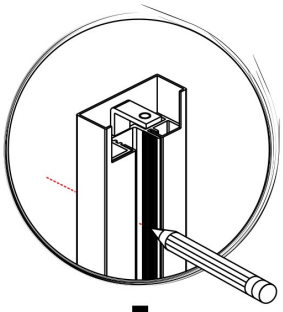

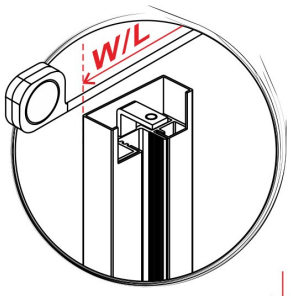

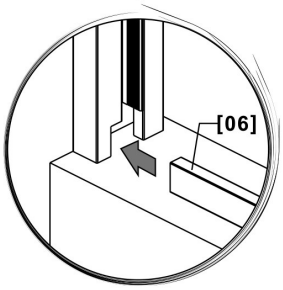

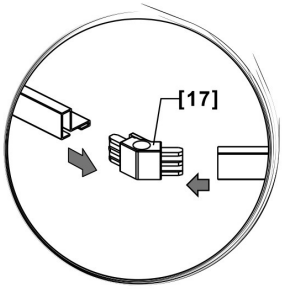

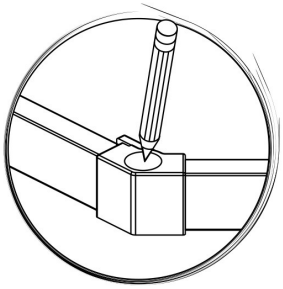

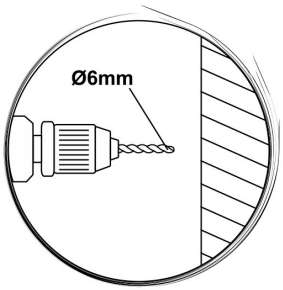

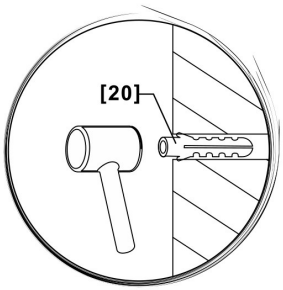

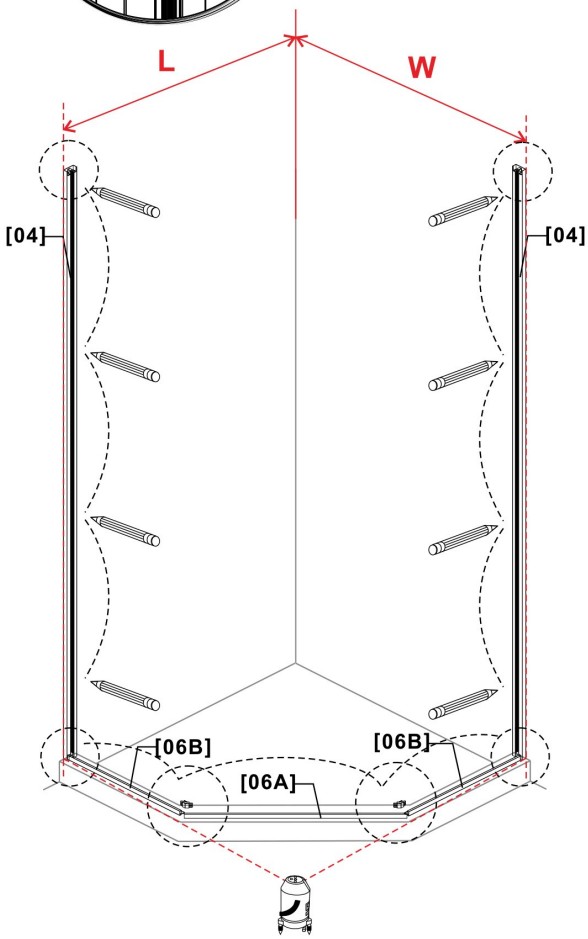

Size	L	W
36”- 36” (914-914mm)	35½”- 36” (902-914mm)	35½”- 36” (902-914mm)

INSTALLATION

IMPORTANT: Recommended for professional installers only. The installer maintains responsibility for installing the product safely.

02

[18] x2

[22] x2 (ST4x20)

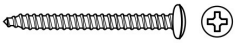

[23] x8 (ST4x35)

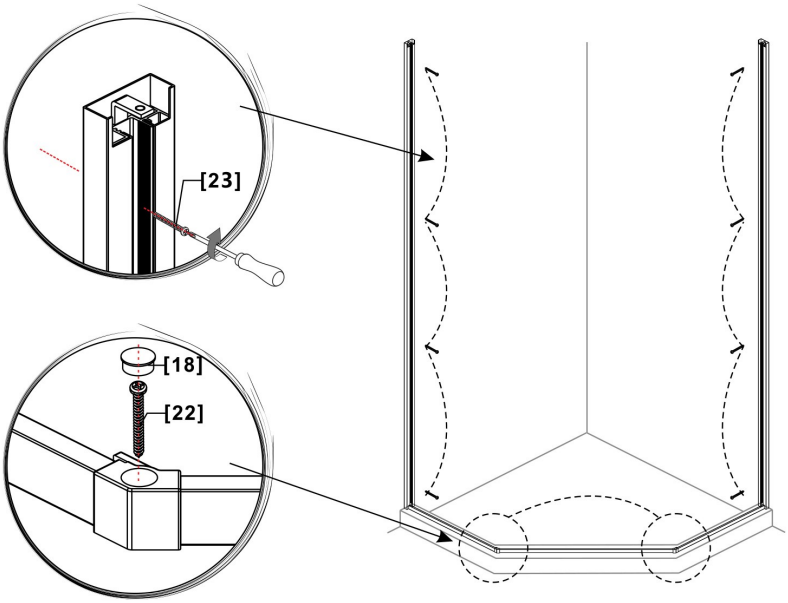

03

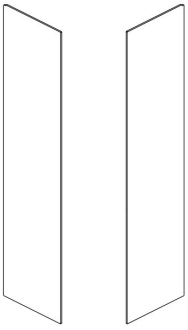

[01] x1 [03] x1

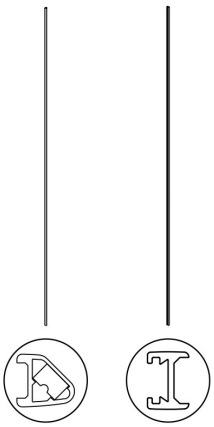

[11] x1 [13] x1

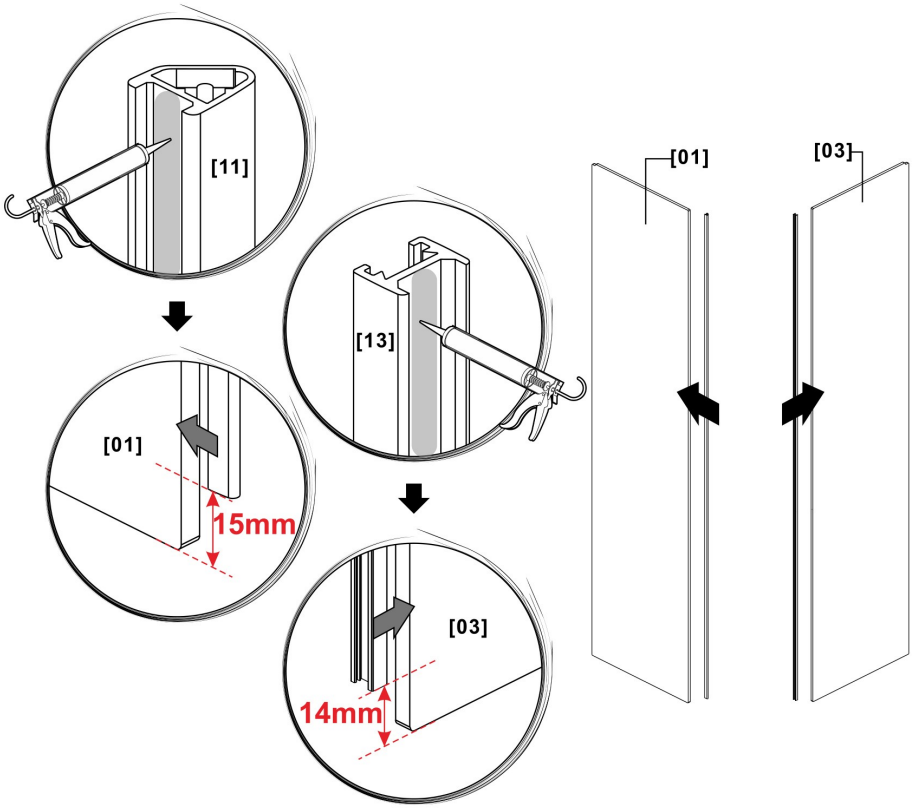

INSTALLATION

IMPORTANT: Recommended for professional installers only. The installer maintains responsibility for installing the product safely.

04

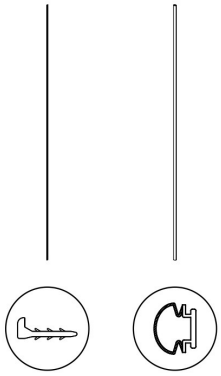

[07] x2 [08] x1

[19] x1

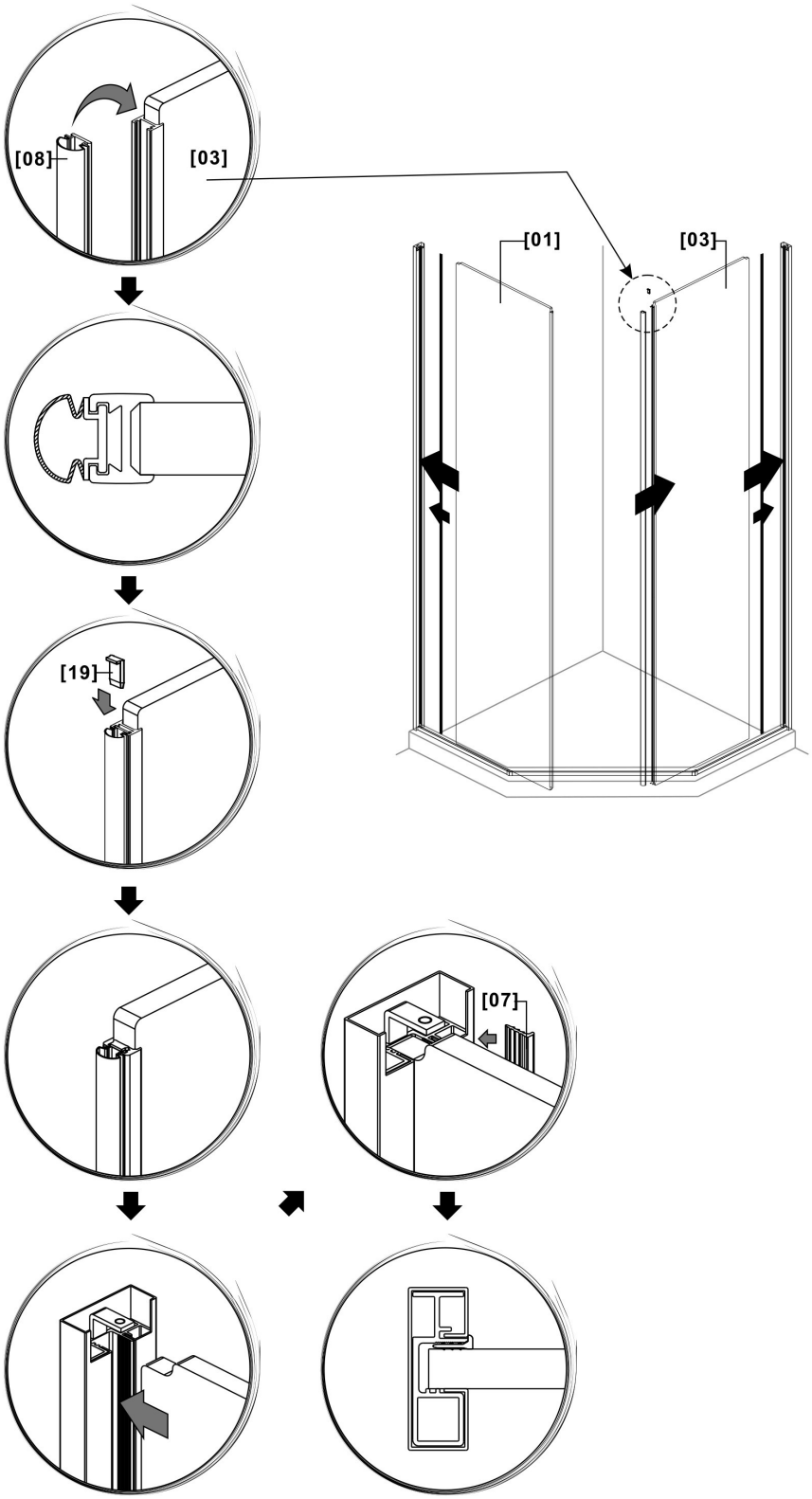

INSTALLATION

IMPORTANT: Recommended for professional installers only. The installer maintains responsibility for installing the product safely.

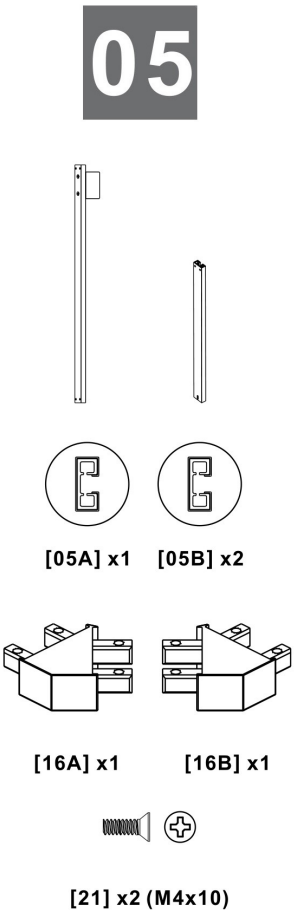

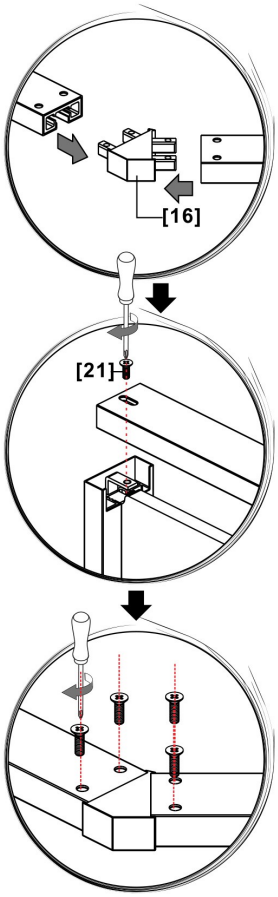

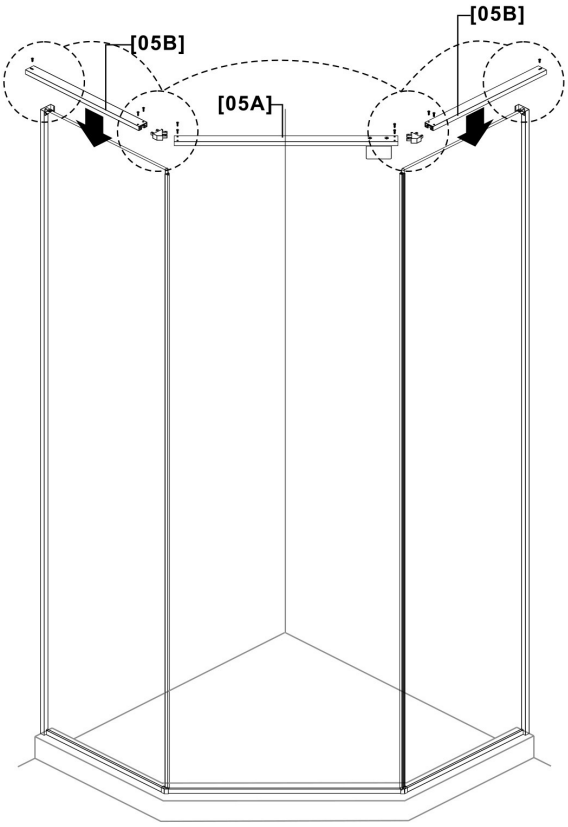

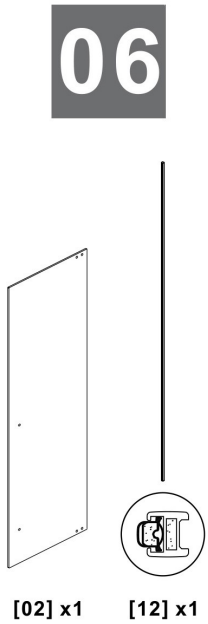

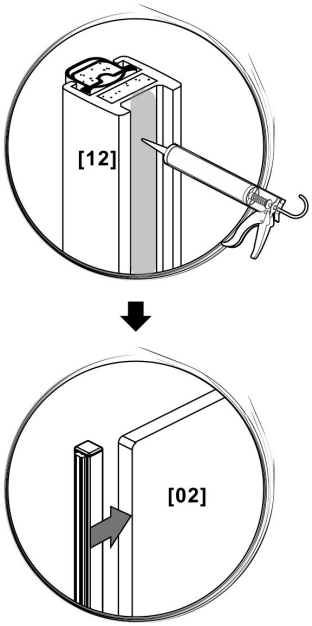

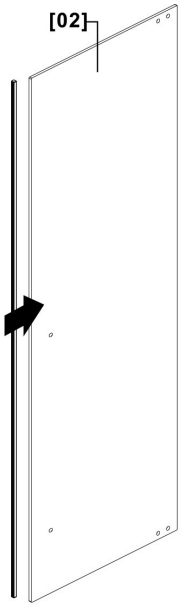

INSTALLATION

IMPORTANT: Recommended for professional installers only. The installer maintains responsibility for installing the product safely.

07

[14] x1

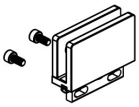

[15] x1

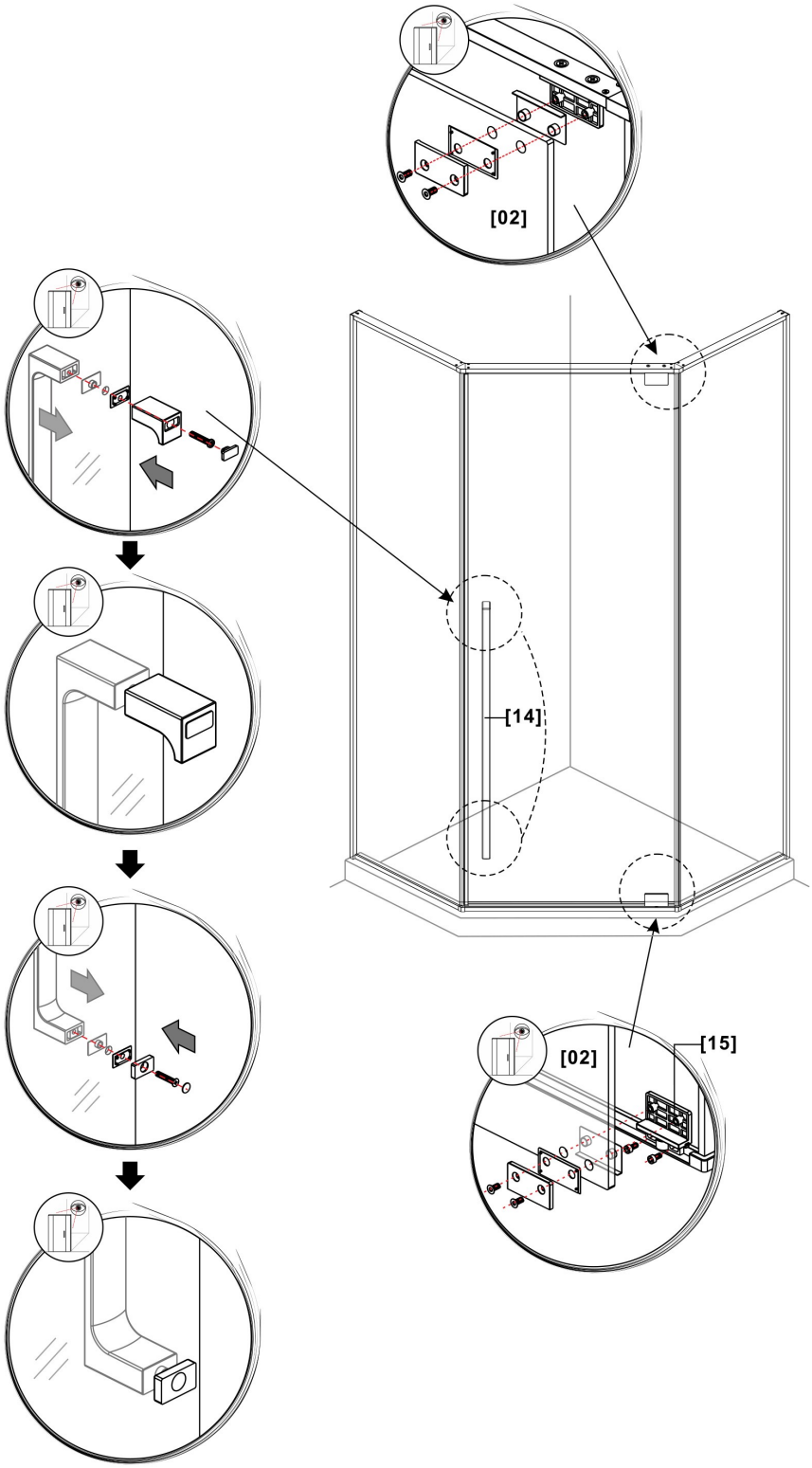

INSTALLATION

IMPORTANT: Recommended for professional installers only. The installer maintains responsibility for installing the product safely.

08

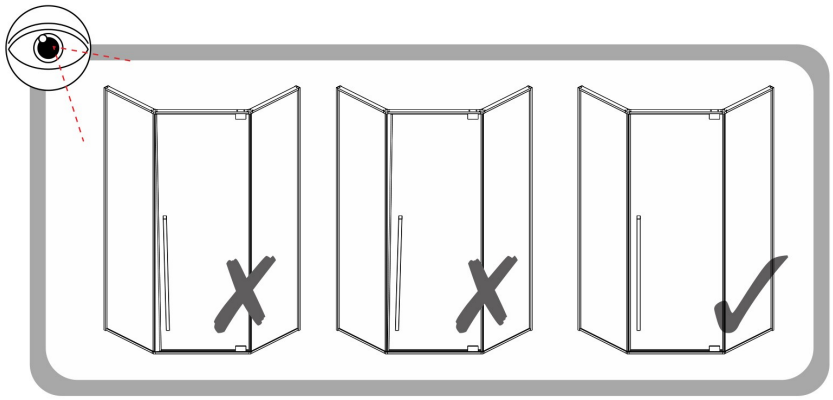

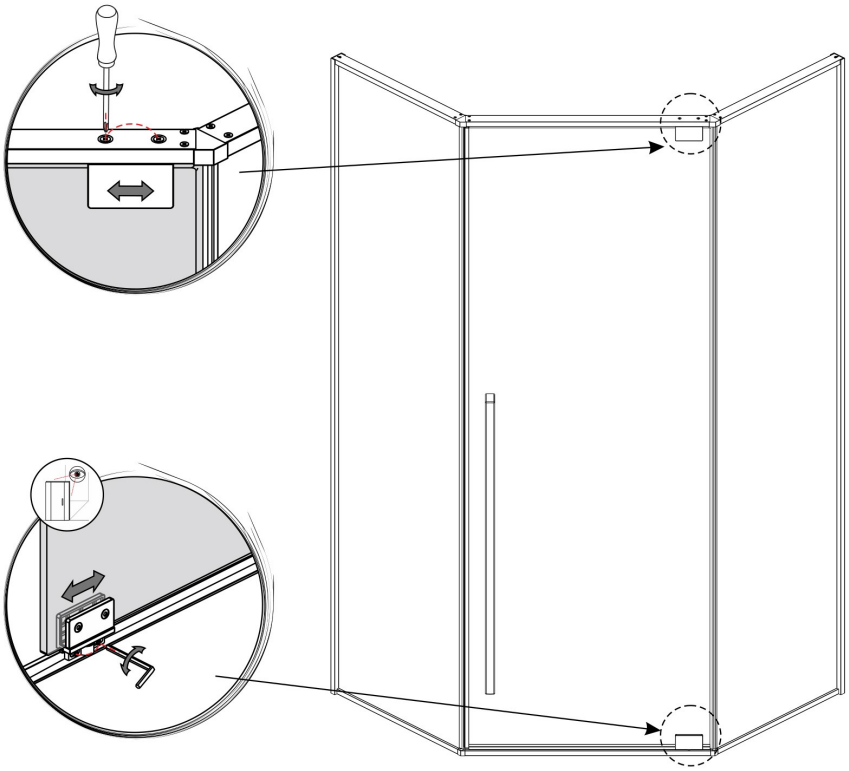

INSTALLATION

IMPORTANT: Recommended for professional installers only. The installer maintains responsibility for installing the product safely.

09

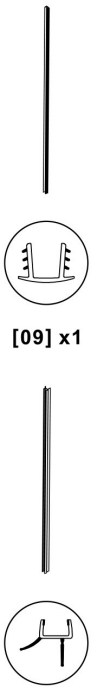

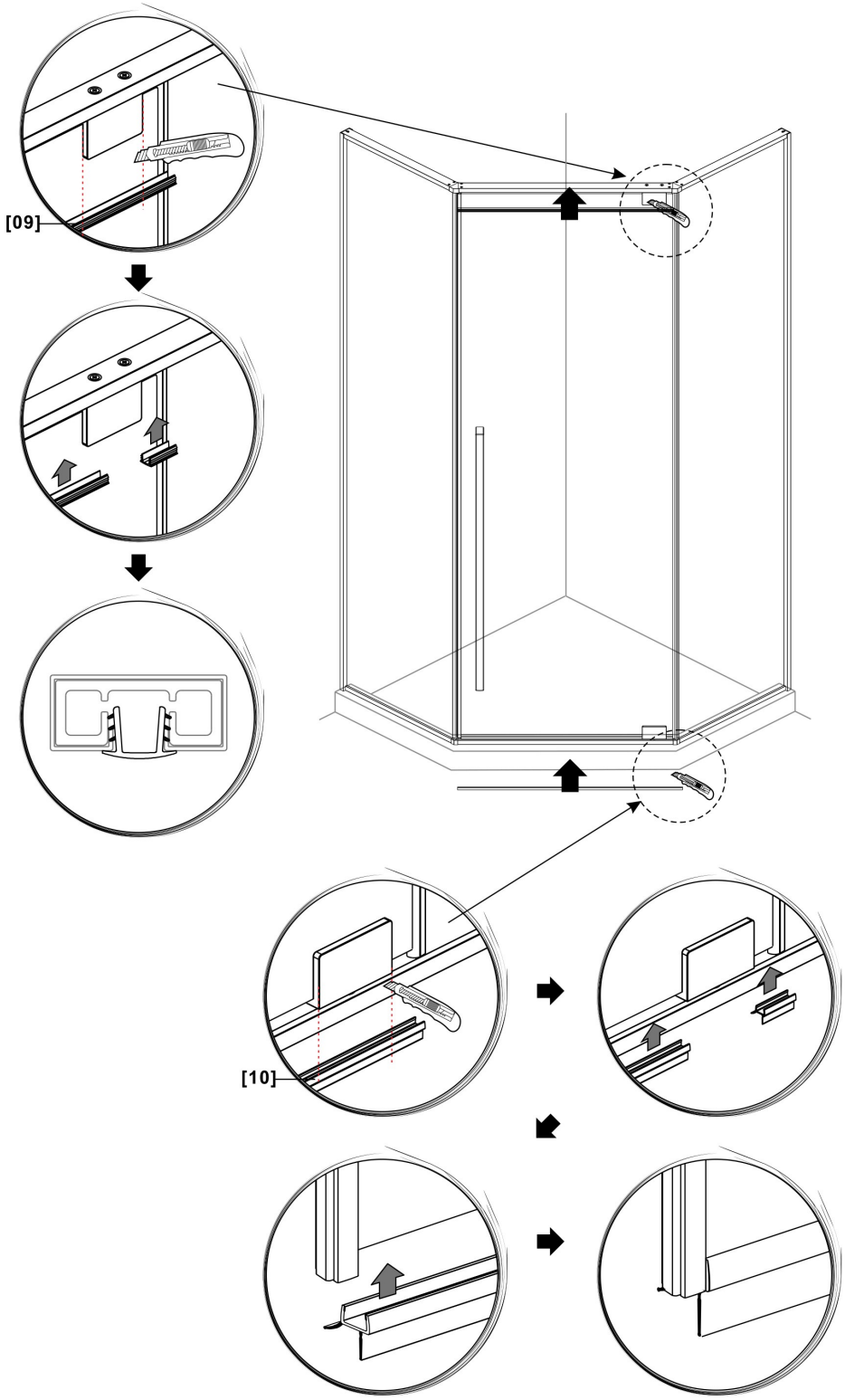

INSTALLATION

IMPORTANT: Recommended for professional installers only. The installer maintains responsibility for installing the product safely.

10

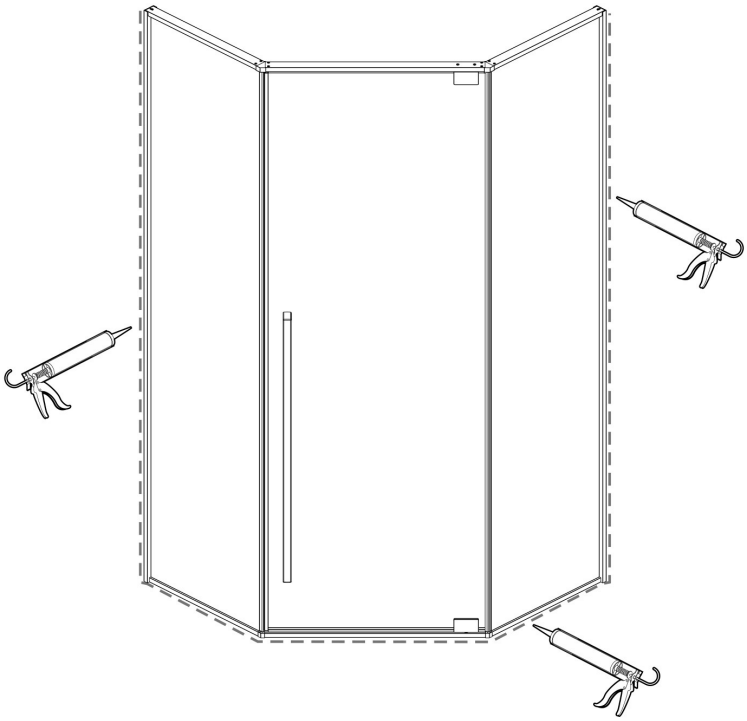

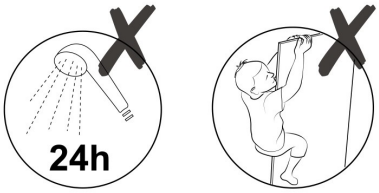

LEGAL DISCLAIMER:

- This instruction guide is done as a public service to customers of Dawn Kitchen & Bath Products, Inc. (“Dawn”). For special situations or further assistance, please consult professionals.
- All products should be inspected by customers upon receipt and before any installation. Any defective product should be reported immediately and should NOT be installed.
- Requirements may vary for installation in a granite, marble, stone, or butcher block countertop.
- Installation by professional installers is highly recommended. Dawn assumes no liability for any damages incurred through the use of information provided in this guide.

CARE AND CLEANING

To maintain the product and to avoid possible damage:

1. Glass cleaners can be used but with caution. Clean as and when required. Regular cleaning prevents scale buildup and water spotting.
2. To clean, flush with clean water and dry with a soft cloth.
3. To remove scale or water spots, only use cleaners made specifically for that purpose. Apply cleaners to cleaning cloths, pads, or sponges first; do not apply directly onto the product.
4. Do not allow any cleaning product to remain on your shower door for longer than necessary.
5. Do not use any abrasive cleaning products, such as scrubbing detergent, polisher, sand-cloth, paper tissue, or scrapper.
6. Do not use detergents or soaps that contain acid or that are undissolvable.
7. After cleaning, rinse thoroughly with clean water to remove any cleaner residue.

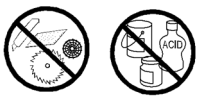

WARRANTY

Limited Lifetime Warranty

Dawn® warranties all of its products to be free from manufacturing defects in material and workmanship during normal residential use for as long as the original purchaser owns his or her home. This warranty only extends to the original consumer and this warranty is non-transferable. If any defect is found in normal residential use, Dawn® will, at its own election, repair, provide a replacement part of product, or make appropriate adjustment at no charge (excluding labor charges and other incidental or consequential costs). Damage to a product caused by accident, misuse, or abuse is NOT covered by this warranty. Improper care and cleaning will void the warranty. If Dawn® is unable to provide a replacement and repair cannot be made, Dawn® may elect to refund the purchase price to the original consumer purchaser in exchange for the return of the product. (IMPORTANT: The original consumer/purchaser should be responsible for inspecting products upon receipt. Any defective product should be reported immediately and should NOT be installed.)

DAWN® WARRANTIES DO NOT COVER, AND DAWN® DISCLAIMS ANY LIABILITY FOR:

1. Conditions or damage NOT resulting from defects in material or workmanship.
2. Conditions or damage resulting from:
   —Normal wear and tear, improper installation or maintenance, misuse, abuse, negligence, accident, moving (tipping) or alteration, scratches or handling damages.
   —Use of abrasive cleaning products or the use of the product in any manner contrary to the product instructions.
   —Conditions in the home such as excessive water pressure, water quality or corrosion.
3. Labor, shipping or other costs for removal, installation, replacement or return of product for warranty service.
4. Parts, accessories, connected materials or related products that are not manufactured by Dawn®.
5. Imperfections such as checks (small surface splits), pitch pockets (small dark holes), grain or darker mineral streaks are natural and are not considered defects.
6. An invoice number will be required for proof of purchase

Dawn® reserves the right to inspect any Dawn® product reported to be defective prior to any repair or replacement. Repair and replacement costs EXCLUDE shipping, labor, and consequential expenses.

To obtain warranty service, contact Dawn® either through your Dealer, Plumbing Contractor, Home Center or E-retailer, or by contacting Dawn® at the contact information listed below. Proof of purchase (original sales receipt) and description of problem must be provided with all warranty claims.

RETURN POLICY

You may only return new, uninstalled, or unused items sold and fulfilled by Dawn Kitchen & Bath Products, Inc. for a full refund within 30 days of delivery. Items must be returned in its original package. Returns of used items or returns after 30 days of delivery may be accepted with a 15% restocking fee. Dawn will pay for return shipping costs only if the return is a result of our fault. If you receive a faulty product and need to exchange it for the same product, please contact our customer service via phone, fax, or e-mail to request a replacement. If you would like to exchange a product for a different one, please first return the original product to our location at 27688 Industrial Blvd., Hayward, CA 94545 and then place a new order.

PARTIAL REFUNDS MAY BE GIVEN TO:

- Most of the items that are returned after 30 days of delivery
- Any item not returned in the condition it was delivered
- Any item that has obvious signs of use
- A 15% restocking fee will apply to all used items or items returned after 30 days of delivery.

ASKING FOR ASSISTANCE

Dawn Customer Service Department
27688 Industrial Blvd., Hayward, CA 94545
Toll-Free: 877-DAWN-USA (877-329-6872)
E-mail: dp@dawnusa.net Technical: tech@dawnusa.net Web: www.dawnusa.net

© 2024 Dawn Kitchen & Bath Products, Inc.